| PROJECT REFERENCE NO. | SHEET NO. |
|---|---|
| W-5209F | 2 |
| R/W SHEET NO. | |
| ROADWAY DESIGN ENGINEER | PAVEMENT DESIGN ENGINEER |

NORTH CAROLINA PROFESSIONAL SEAL 025499 ENGINEER
1/21/2015
DocuSigned by:
William A. Blanton
CC0837181181C48D...

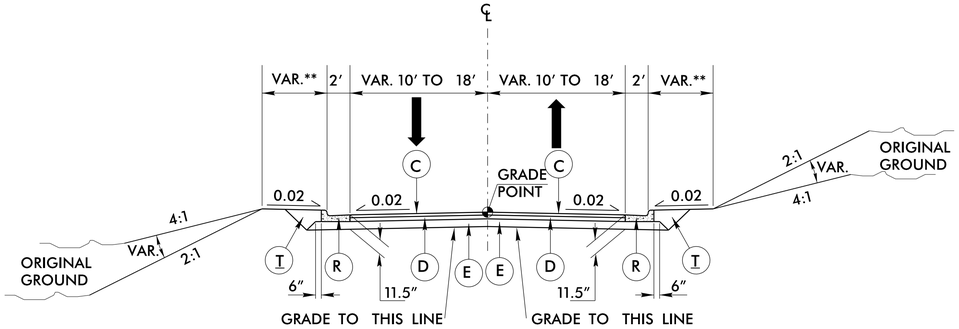


TYPICAL SECTION NO. 1
–L– STA. 11+10.32 TO 15+00
–Y3– STA. 12+50 TO 13+54.05

**–L– SHOULDER=8.5′
–L– 5′ CONC SIDEWALK STA. 11+10.32 TO 11+41
–Y3– SHOLDER=3.5′ TO VAR.

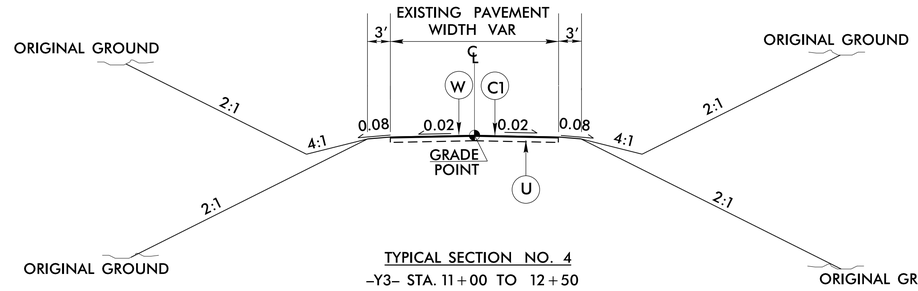


TYPICAL SECTION NO. 4
–Y3– STA. 11+00 TO 12+50

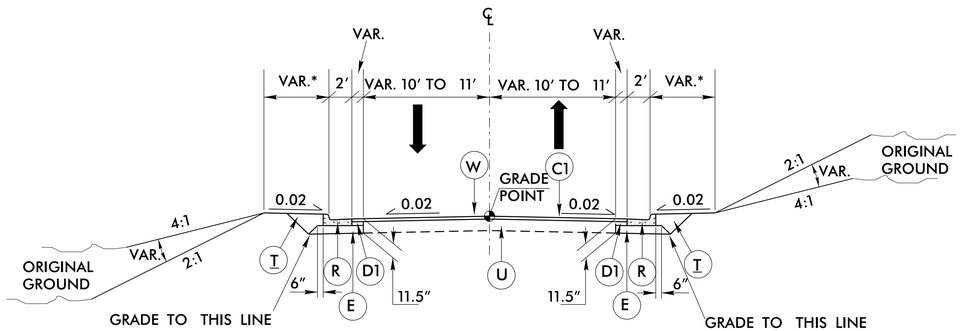


TYPICAL SECTION NO. 2
–L– STA. 15+00 TO 16+50
*SHOULDER TAPERS FROM 8.5′
AT 15+00 TO 3.5′ AT 16+00

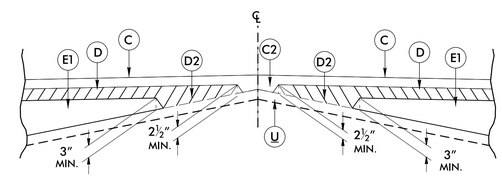


DETAIL SHOWING METHOD OF WEDGING
USE WITH TYPICAL SECTIONS NO. 1–4

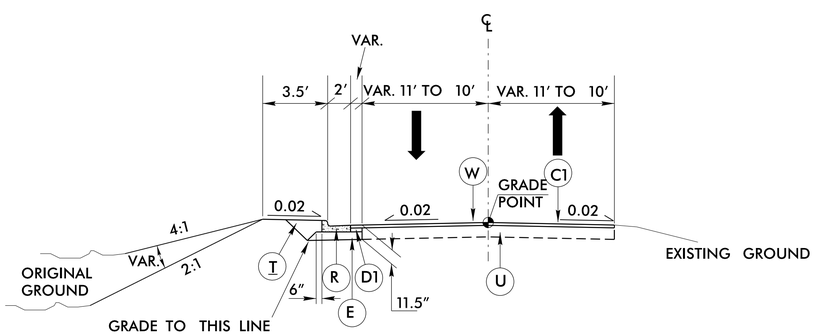


TYPICAL SECTION NO. 3
–L– STA. 16+50 TO 17+00

## PAVEMENT SCHEDULE

| | | | |
|---|---|---|---|
| C | PROP. APPROX. 3″ ASPHALT CONCRETE SURFACE COURSE, TYPE S9.5B, AT AN AVERAGE RATE OF 168 LBS. PER SQ. YD. IN EACH OF 2 LAYERS. | E | PROP. APPROX. 4½″ ASPHALT CONCRETE BASE COURSE, TYPE B25.0B, AT AN AVERAGE RATE OF 513 LBS. PER SQ. YD. |
| C1 | PROP. APPROX. 1½″ ASPHALT CONCRETE SURFACE COURSE, TYPE S9.5CB, AT AN AVERAGE RATE OF 168 LBS. PER SQ. YD. | E1 | PROP. VAR. DEPTH ASPHALT CONCRETE BASE COURSE TYPE B25.0B AT AN AVERAGE RATE OF 114 LBS PER SQ YD PER 1″ DEPTH TO BE PLACED IN LAYERS NOT LESS THAN 3″ IN DEPTH OR GREATER THAN 5½″ DEPTH. |
| C2 | PROP. VAR. DEPTH ASPHALT CONCRETE SURFACE COURSE, TYPE S9.5B, AT AN AVERAGE RATE OF 112 LBS. PER SQ. YD. PER 1″ DEPTH. TO BE PLACED IN LAYERS NOT TO EXCEED 2″ IN DEPTH. | R | 2′-6″ CONCRETE CURB AND GUTTER (STANDARD 846.01) |
| D | PROP. APPROX. 4″ ASPHALT CONCRETE INTERMEDIATE COURSE, TYPE I19.0B, AT AN AVERAGE RATE OF 456 LBS. PER SQ. YD. | T | EARTH MATERIAL |
| D1 | PROP. APPROX. 5½″ ASPHALT CONCRETE INTERMEDIATE COURSE, TYPE I19.0B, AT AN AVERAGE RATE OF 313.5 LBS. PER SQ. YD. IN EACH OF TWO LAYERS | U | EXISTING PAVEMENT |
| D2 | PROP. VAR. DEPTH ASPHALT CONCRETE INTERMEDIATE COURSE, TYPE I19.0B, AT AN AVERAGE RATE OF 114 LBS. PER SQ. YD. PER 1″ DEPTH, TO BE PLACE IN LAYERS NOT LESS THAN 2½″ IN DEPTH OR GREATER THAN 4″ IN DEPTH. | W | WEDGING |

5/14/99
S:\DDC\2013_W5209F_Wrangs\W5209F_ddc_typ.dgn
09-DEC-2014 11:10
01/09/2015